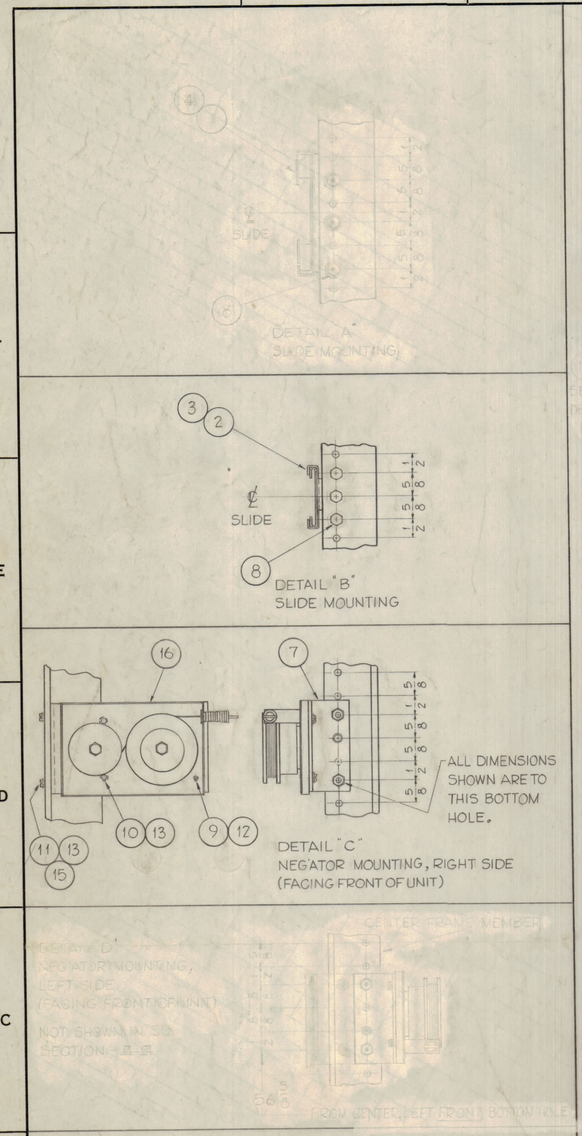

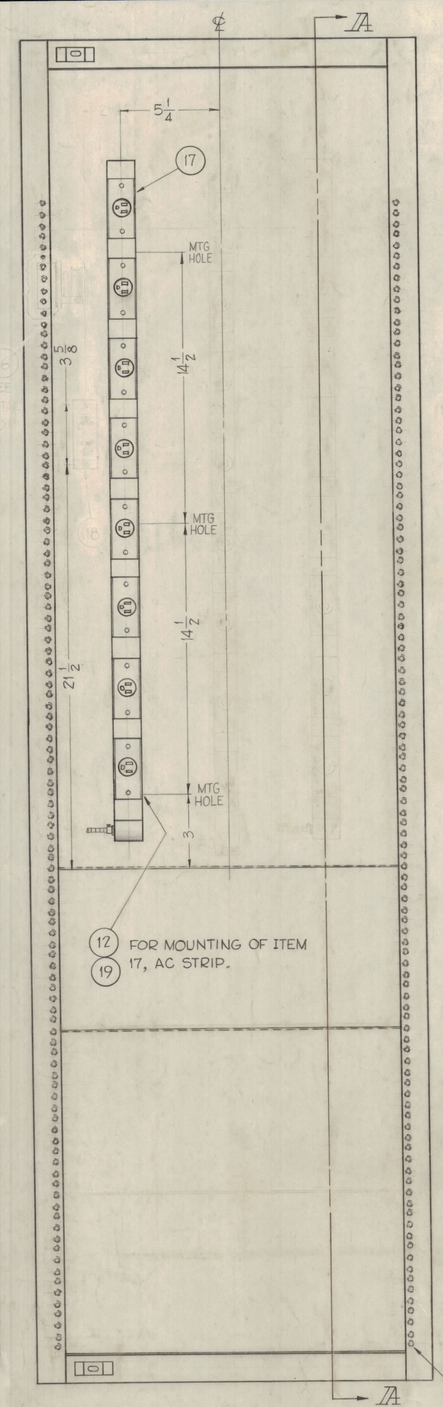

~ FRONT ~

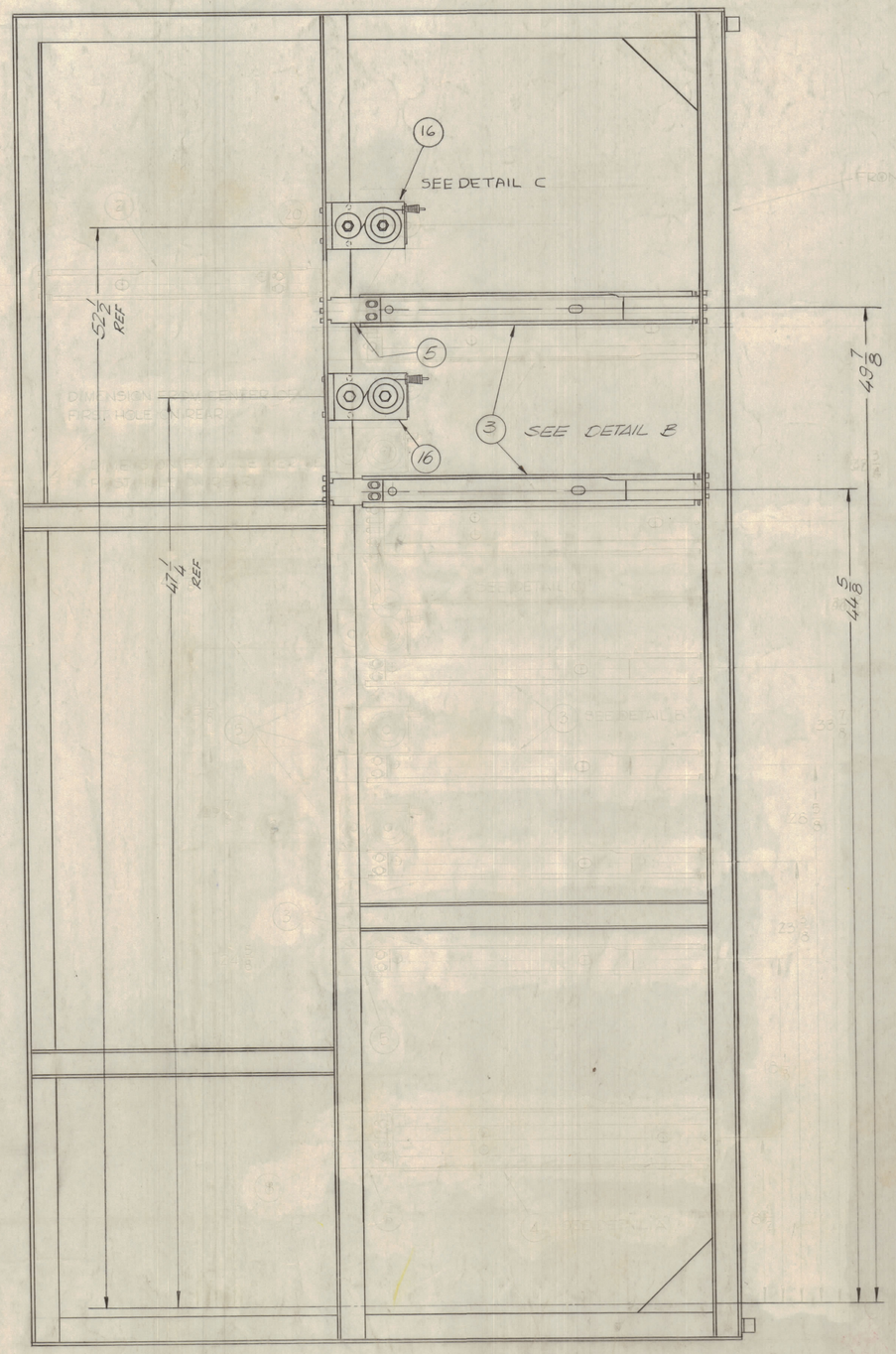

SECTION ~ A - A

ALL DIMENSIONS FOR SLIDES AND NEG'ATORS TAKEN FROM THE CENTER OF THE FIRST HOLE.

NOTE: *
* - THESE ITEMS ARE LISTED IN APPROPRIATE SYSTEMS M/L.
ALL OTHER ITEMS ARE LISTED IN APPROPRIATE AUXILIARY FRAME M/L.

REQ.	ITEM	PART NO.	DESCRIPTION	SYMBOL
5	19	SCBP0632BN5	SCREW, MACHINE	
	18	DELETED		
1	17	AX667	AC POWER STRIP (8 CONNECTOR)	
2	16	SP 137-1	NEG'ATOR	
4	15	NTH1032BN12	NUT, HEXAGON, DOUBLE CHAMFER	
* 28	14	LWS10MRN	LOCKWASHER, SPRING TYPE	
8	13	LWE10MRN	LOCKWASHER, EXTERNAL TOOTH	
7	12	LWE06MRN	LOCKWASHER, EXTERNAL TOOTH	
4	11	SCBP1032BN8	SCREW, MACHINE	
4	10	SCBP1024BN6	SCREW, MACHINE	
2	9	SCBP0540BN6	SCREW, MACHINE	
* 28	8	SCHH1032SN8	SCREW, HEXAGON HEAD	
2	7	MS 2470	BRACKET, NEG'ATOR MOUNTING	
*	6	DELETED		
* 4	5	MS 2457	ADAPTER, BKT, REAR 1-3/4" SLIDE	
*	4	DELETED		
* 1	3	TK108-18A	SLIDE, TILT	
* 1	2	TK108-18	SLIDE, TILT	
	1	DELETED		

REQ. PER UNIT	MODEL	SECTION	ASS'Y. NO.	DATE
	GPTM 40KJS		AX 5115	2-26-70

USED ON

STOCK SIZE

MATERIAL

TYPE & TEMPER | HEAT TREAT. SPEC.

FINISH & SPEC. NO.

THE TECHNICAL MATERIEL CORP.
MAMARONECK, NEW YORK

SLIDE FRAME & AC ASSY.

DRAWN	CHECKED	FINAL APPROVAL
EVANGELIST	[illegible]	

ELEC. DES. APP. | MECH. DES. APP. | SHEET OF | A 4838

DEFIANCE NO. 1020

SYM	ZONE	DESCRIPTION	DATE	CH. NO.	DRAFTS	CHECKER	ENG. APP.

UNLESS OTHERWISE SPECIFIED:
DIMENSIONS ARE IN INCHES
TOLERANCES ON
FRACTIONS ± 1/64 DECIMALS ± .005 ANGLES ± 1/2°

SCALE 1/4, Do Not Scale

MAXIMUM ALLOWABLE TOLERANCES HAVE BEEN DETERMINED AND ANY DEVIATIONS WILL BE CAUSE FOR REJECTION.
REMOVE ALL BURRS & SHARP EDGES

TMC FORM NO. 111