IF IT IS FOUND DESIRABLE TO CHANGE ANY TOLERANCE OR OTHER DETAIL SPECIFIED ON THIS DRAWING NOTIFY THE PURCHASER PROMPTLY.

MAXIMUM ALLOWABLE TOLERANCES HAVE BEEN DETERMINED AND DEVIATIONS WILL BE CAUSE FOR REJECTION. REMOVE ALL BURRS AND SHARP EDGES

STANDARD [illegible]

SW-169

REQ. PER UNIT	USED ON			
	MODEL	PROJECT NO.	ASS'Y. NO.	DATE

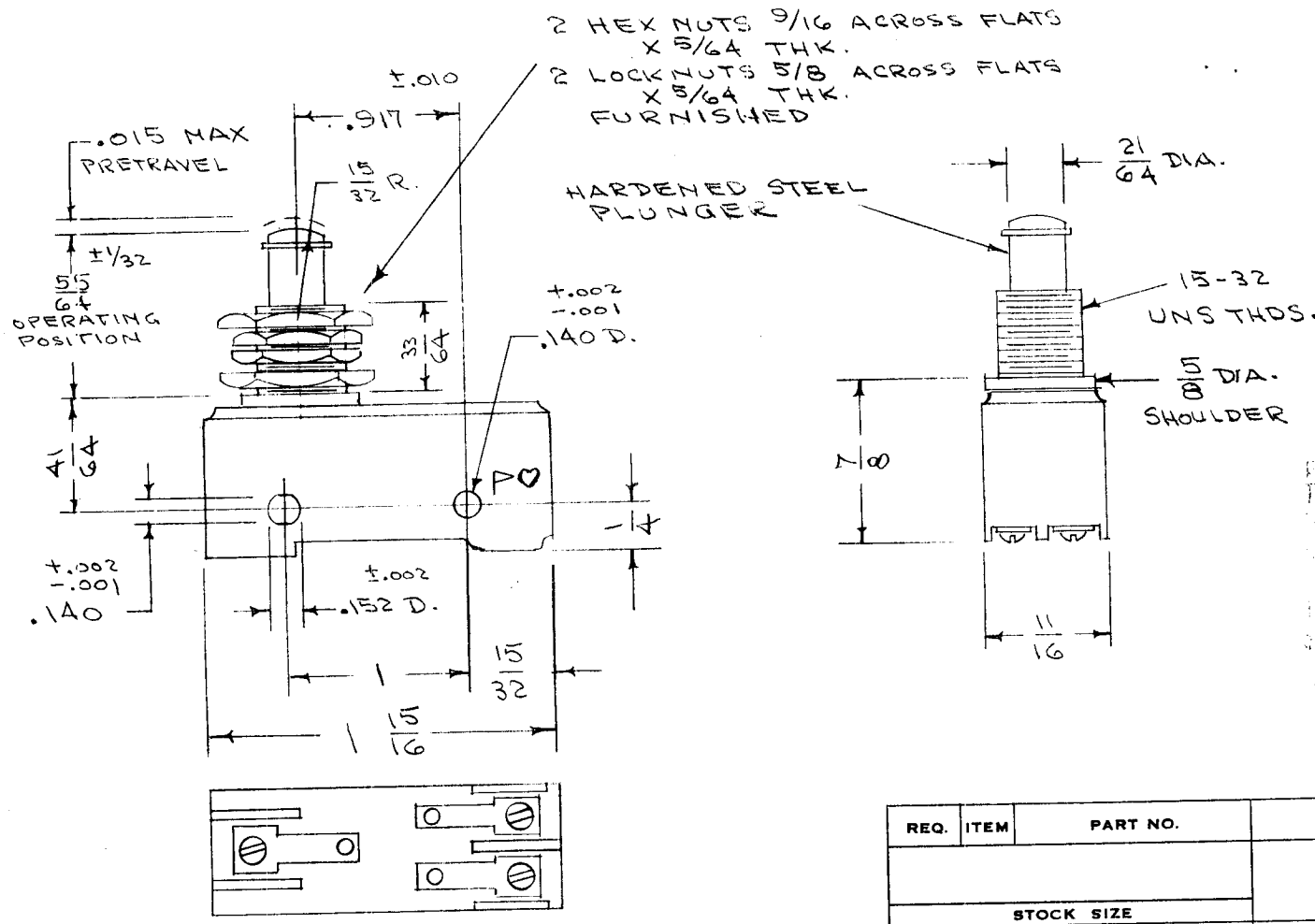

SOLDER LUG TERMINALS

SINGLE POLE OVERTHROW

OPER. FORCE - 9 TO 13 OZ.
RELEASE " - 4 OZ. MIN.
OVERTRAVEL - 7/32" MAX.
DIFF. TRAVEL - .0004" TO .002"
.15A - 125, 250 OR 460 V AC
1/2 A - 125 V DC
1/4 A - 250 V DC

NOTICE TO PERSONS RECEIVING THIS [illegible]

THE TECHNICAL MATERIEL CORPORATION [illegible] proprietary right in the material [illegible] This drawing is [illegible] confidence for [illegible] not to be reproduced or [illegible] without the [illegible] MATERIEL CORPORATION [illegible] substance and [illegible] at any time.

Property of:
THE TECHNICAL MATERIEL CORPORATION
MAMARONECK, NEW YORK

REQ.	ITEM	PART NO.	DESCRIPTION	SYMBOL

STOCK SIZE

MATERIAL | WEIGHT PER PC.

TYPE & TEMPER

HEAT TREAT. SPEC.

FINISH & SPEC. NO.

THE TECHNICAL MATERIEL CORP.
MAMARONECK. NEW. YORK

SWITCH, PLUNGER

DRAWN	ELEC. DES. APP.	MECH. DES. APP.
CDD	C P	B B

CHECKED	FINAL APPROVAL
[illegible]	A. J. J.

ISSUE	ITEM	CHANGED FROM	DATE	CN. NO.	DRAFTS	CHECKER	ENG. APP.

TOLERANCES

ALL OTHERS: DEC. DIM. ± ; FRAC. DIM. ± ; ANGULAR DIM. ±

SCALE 5401-54 (BZ-2RQ1)

DRILL, PUNCH, COMMERCIAL STOCK SIZES AND MANUFACTURERS TOLERANCES ARE NOT INCLUDED.

SW-169

FORM — 108