REQ. PER UNIT	USED ON MODEL	ASS'Y. NO.	DATE	PX 925	Ø
1	AZ104	Loose Item			

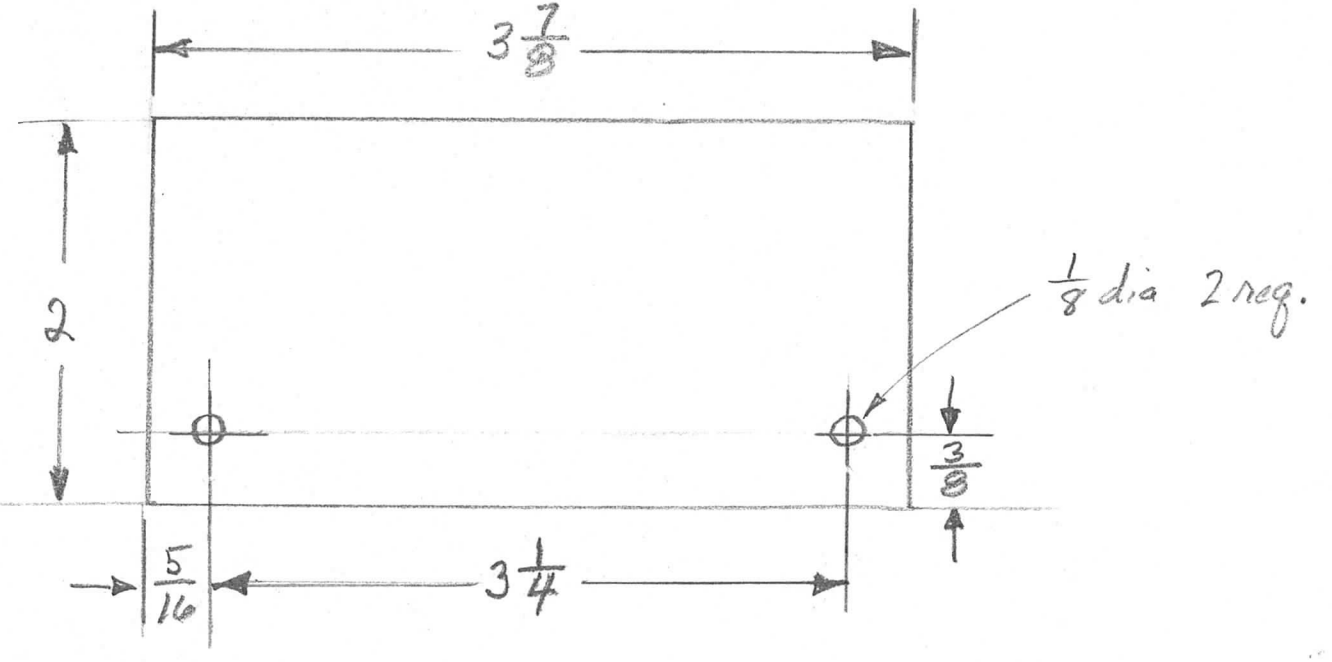

ISSUE	ITEM	CHANGED FROM	DATE	CH. NO.	DRAFTS	CHECKER	ENG. APP.
	Ø	~~ORIGINAL RELEASE FOR PRODUCTION~~	42765		CVL		

REQ.	ITEM	PART NO.	HAY	DESCRIPTION	SYMBOL
		1/16 STOCK SIZE	THE TECHNICAL MATERIEL CORP. MAMARONECK, NEW YORK		
		Phenolic MATERIAL	Cover, Terminal Strip		
XXXP TYPE & TEMPER	HEAT TREAT. SPEC.	R/H DRAWN	CHECKED	FINAL APPROVAL 4/27/65	
NATURAL FINISH & SPEC. NO.		ELEC. DES. APP.	MECH. DES. APP.	PX 925	Ø

TOLERANCES

DEC. DIM. ±
FRAC. DIM. ±
ANGULAR DIM. ±

SCALE: #

MAXIMUM ALLOWABLE TOLERANCES HAVE BEEN DETERMINED AND ANY DEVIATIONS WILL BE CAUSE FOR REJECTION.
REMOVE ALL BURRS AND SHARP EDGES