THE CONTENTS OF THIS DRAWING ARE THE EXCLUSIVE PROPERTY OF THE TECHNICAL MATERIEL CORP. ITS UNAUTHORIZED USE OR REPRODUCTION IN WHOLE OR IN PART IS STRICTLY FORBIDDEN.

JJ-296

TMC PART NO.	NO. OF CONTACTS	DIMENSIONS A	B	C
JJ-296-1	24	3-1/8	2.522	2.704

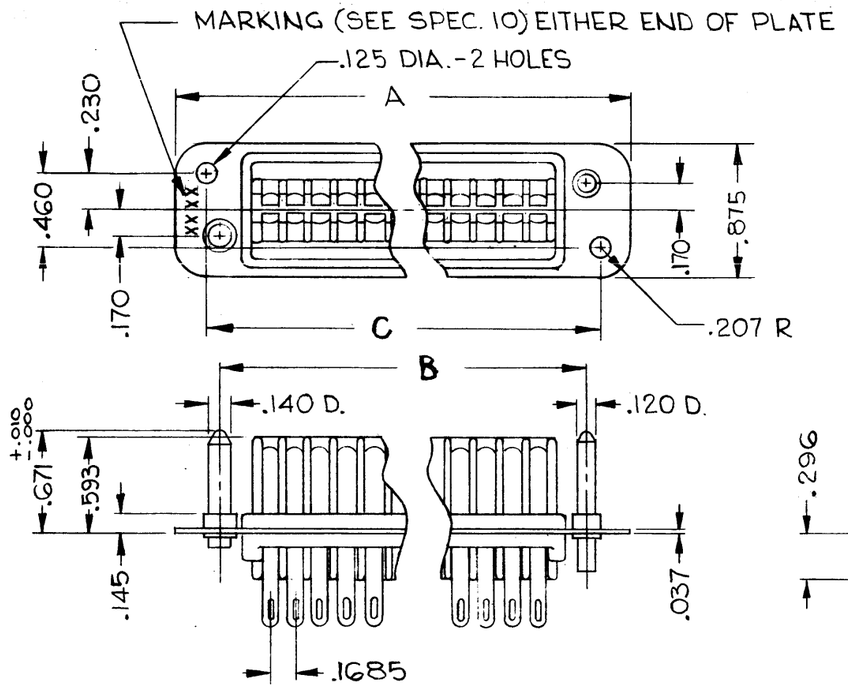

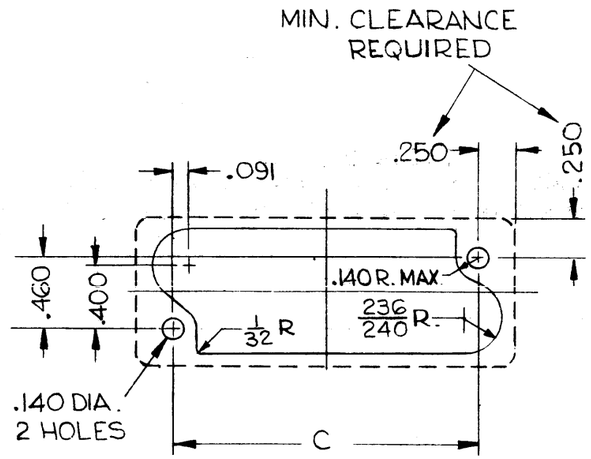

RECOMMENDED MOUNTING LAYOUT (VIEWED FROM WIRING END OF CONNECTOR)

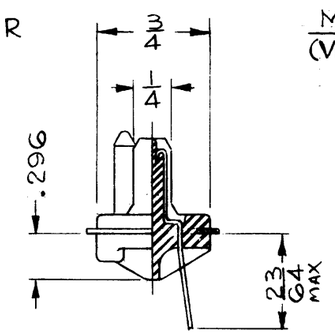

SPECIFICATIONS

1. NUMBER OF CONTACTS: SEE CHART
2. MATING ENDS: 1
3. CONTACT DATA:
   - A. ALL CONTACTS IDENTICAL
   - B. POLARITY: MALE
   - C. STYLE: FLAT
   - D. CURRENT RATING: 5 AMPS,
   - E. DCWV: 750 V
   - F. ACWV: NOT RATED
   - G. MATERIAL: BRASS
   - H. FINISH: GOLD PLATE
4. DIELECTRIC: DIALLYL PHTHALATE (BLUE)
5. POLARIZATION:
   TYPE: GUIDE PINS (LARGE AND SMALL)
6. LOCKING FEATURES: NONE
7. CABLE ACCOMMODATIONS: TERMINALS ACCEPT SIZE 16 STRANDED WIRE
8. MOUNTING PLATE:
   - A. CONSTRUCTION: MOULDED INTO DIEL. BODY.
   - B. MATERIAL: STAINLESS STEEL
   - C. FINISH: PASSIVATED
9. MATING CONNECTOR: TMC NO. JJ-295
10. MARKING: MOUNTING PLATE SHALL BE MARKED WITH TMC PART NO. AND DATE

SYM	DESCRIPTION	DATE	CH. NO.	DRAFTS	CHECKER	ENG. APP.

UNLESS OTHERWISE SPECIFIED:
DIMENSIONS ARE IN INCHES
TOLERANCES ON
FRACTIONS ± 1/64 DECIMALS ± .005 ANGLES ± 1/2°

SCALE: S401-71 (26-159)

MAXIMUM ALLOWABLE TOLERANCES HAVE BEEN DETERMINED AND ANY DEVIATIONS WILL BE CAUSE FOR REJECTION. REMOVE ALL BURRS AND SHARP EDGES

REQ. PER UNIT	MODEL	SECTION	ASS'Y. NO.	DATE
1	TTR-10		CA-833	7-10-63

USED ON

REQ.	ITEM	PART NO.	DESCRIPTION	SYMBOL

STOCK SIZE: —

MATERIAL: SEE SPEC #8B

TYPE & TEMPER: —

HEAT TREAT. SPEC.: —

FINISH & SPEC. NO.: SEE SPEC #8C

THE TECHNICAL MATERIEL CORP.
MAMARONECK, NEW YORK

CONNECTOR, RECEPTACLE, MALE, RIBBON TYPE, FLOAT MOUNTED

DRAWN	CHECKED	FINAL APPROVAL
R. Chenault 7-10-63	[signature]	[signature]

ELEC. DES. APP.	MECH. DES. APP.	
RON KOHN 7.18.63	JC 10/11/63	JJ-296