THE CONTENTS OF THIS DRAWING ARE THE EXCLUSIVE PROPERTY OF THE TECHNICAL MATERIEL CORP. ITS UNAUTHORIZED USE FOR REPRODUCTION IN WHOLE OR IN PART IS STRICTLY FORBIDDEN.

REQ. PER UNIT	USED ON MODEL	ASS'Y. NO.	DATE		
			1-11-63	JJ-275	A

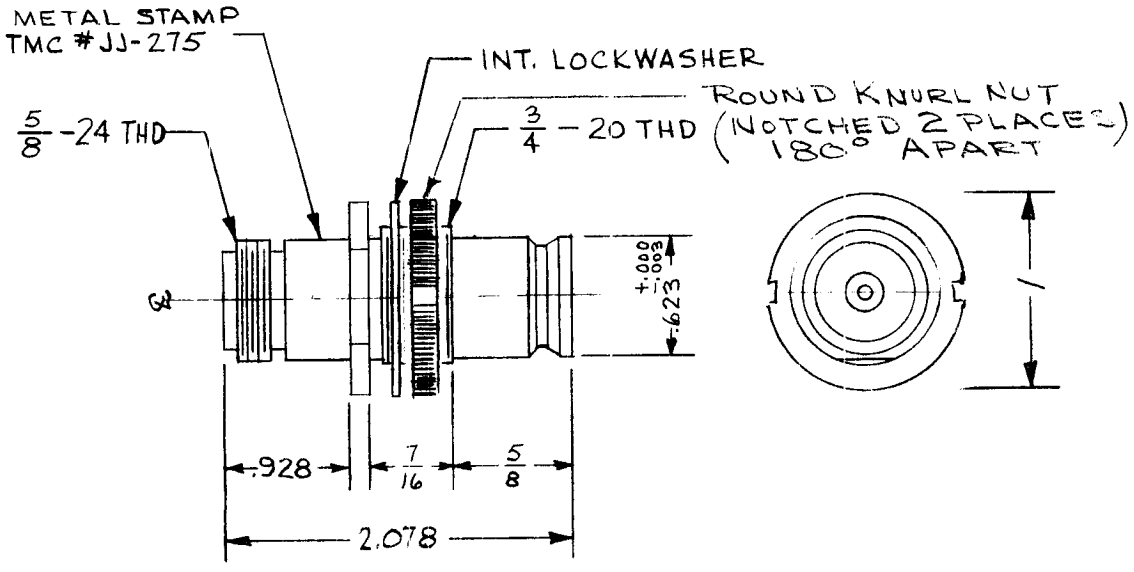

SPECIFICATIONS:

TYPE- Adapter
No. of Contacts - One (1)
Type of Contact - Female (2)
Dielectric - Teflon

ELECTRICAL DATA:
Max. Peak Opr. Volt - 1500
Freq. Limit - 10,000 mcs
Nominal Impedance - 50

MATING ACCOMMODATIONS:
To QDS "N" Series

MATERIAL:
External Parts - Brass
Contact - Beryllium Copper
Gasket - None

FINISH:
External Parts - Silver Plate
Rhodium Flash
Contact - Silver Plate
Gold Flash

SYM	DESCRIPTION	DATE	CH. NO.	DRAFTS	CHECKER	ENG. APP.
A	MATING ACC. WAS "N" SERIES KNURL NUT WAS HEXAGON	4/21/66	16132	JH	JBe	

UNLESS OTHERWISE SPECIFIED
DIMENSIONS ARE IN INCHES AND INCLUDE CHEMICALLY APPLIED OR PLATED FINISHES

TOLERANCES
DECIMALS: .X ±.05, .XX ±.01, .XXX ±.005
FRACTIONS ± 1/64
ANGLES ± 0° 30'

SCALE
CODE

REQ.	ITEM	PART NO.	DESCRIPTION	SYMBOL

STOCK SIZE
MATERIAL
TYPE & TEMPER | HEAT TREAT. SPEC.
FINISH & SPEC. NO.

THE TECHNICAL MATERIEL CORP.
MAMARONECK, NEW YORK

CONNECTOR, RECEPTACLE ADAPTER

DRAWN	CHECKED	FINAL APPROVAL
TANTILLO		
ELEC. DES. APP.	MECH. DES. APP.	

JJ-275 A