| REQ. PER UNIT | USED ON MODEL | ASS'Y. NO. | DATE | JJ-231 |
|---|---|---|---|---|
| | | | | |

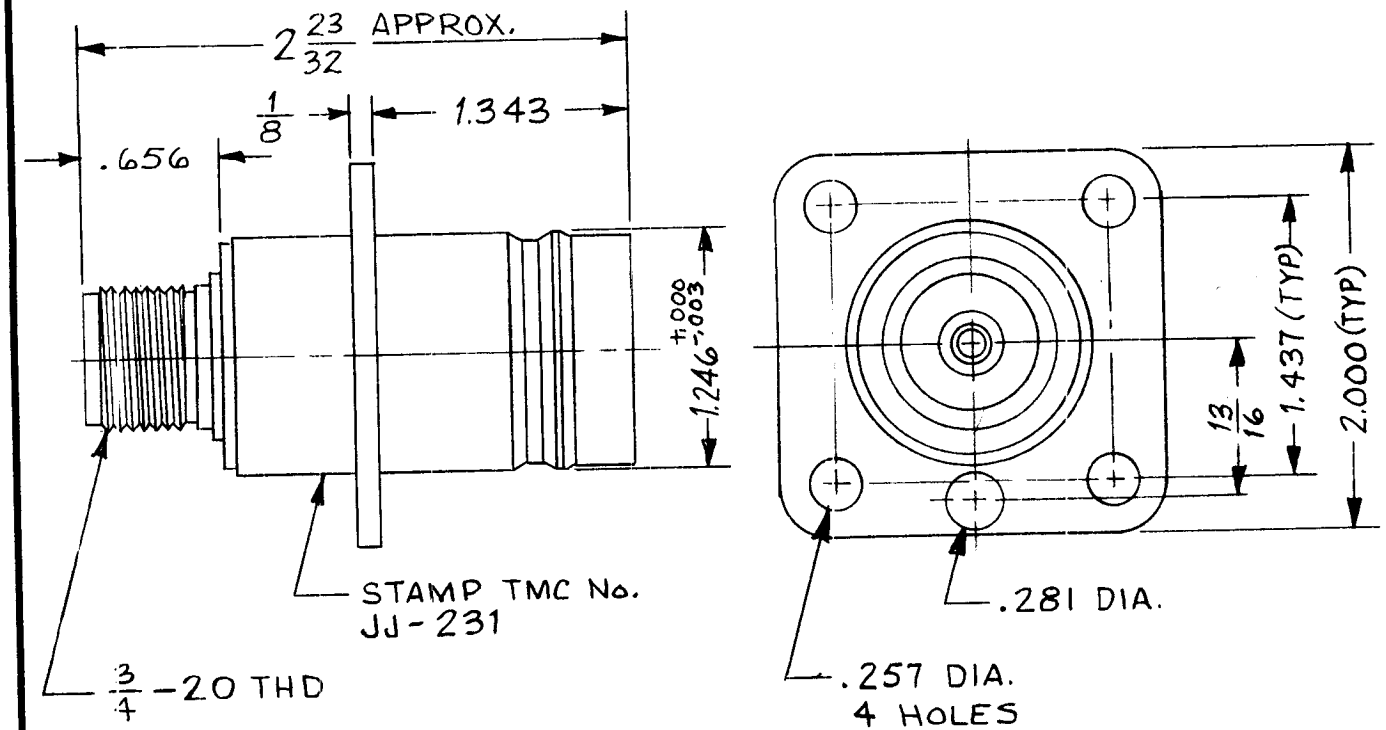


**SPECIFICATIONS:**
Series - QDL
No. of Contacts - ONE (1)
Type of Contact - FEMALE
Dielectric - TEFLON

**ELECTRICAL DATA:**
Max. Peak Opr. Volt - 1500 V
Freq. Limit - 10,000 MCS
Nominal Impedance - 50 OHMS

**CABLE ACCOMMODATIONS:**
Type - NONE

**MATING ACCOMMODATIONS:**
Type - HN

**MATERIAL:**
External Parts - BRASS
Contact - BERYLLIUM COPPER
Gasket - NONE

**FINISH:**
External Parts - RHODIUM
Contact - GOLD FLASH

**PANEL:**
Max. Thickness - 3/16

| SYM | DESCRIPTION | DATE | CH. NO. | DRAFTS | CHECKER | ENG. APP. |
|---|---|---|---|---|---|---|
| | | | | | | |

UNLESS OTHERWISE SPECIFIED
DIMENSIONS ARE IN INCHES AND INCLUDE CHEMICALLY APPLIED OR PLATED FINISHES

TOLERANCES: DECIMALS .X ±.05, .XX ±.01, .XXX ±.005; FRACTIONS ± 1/64; ANGLES ± 0° 30'

SCALE

CODE: S401-70-2696

| REQ. | ITEM | PART NO. | MARTINENGO DESCRIPTION | SYMBOL |
|---|---|---|---|---|
| | | | | |

STOCK SIZE

MATERIAL

TYPE & TEMPER | HEAT TREAT. SPEC.

FINISH & SPEC. NO.

THE TECHNICAL MATERIEL CORP.
MAMARONECK, NEW YORK

ADAPTER, CONNECTOR, RECEPTACLE
QDL (F) TO HN (F)

| DRAWN | CHECKED | FINAL APPROVAL |
|---|---|---|
| M. TANTILLO 9-26-64 | 10/4/63 | BP |
| ELEC. DES. APP. | MECH. DES. APP. | JJ-231 |
| | 10-4-63 | |

STOCK NO. 440H

TMC FORM 108-A