IF IT IS FOUND DESIRABLE TO CHANGE ANY TOLERANCE OR OTHER DETAIL SPECIFIED ON THIS DRAWING NOTIFY THE PURCHASER PROMPTLY.

MAXIMUM ALLOWABLE TOLERANCES HAVE BEEN DETERMINED AND DEVIATIONS WILL BE CAUSE FOR REJECTION. REMOVE ALL BURRS AND SHARP EDGES

STANDARD DRAWING

JJ-131

REQ. PER UNIT	USED ON			
	MODEL	PROJECT NO.	ASS'Y. NO.	DATE

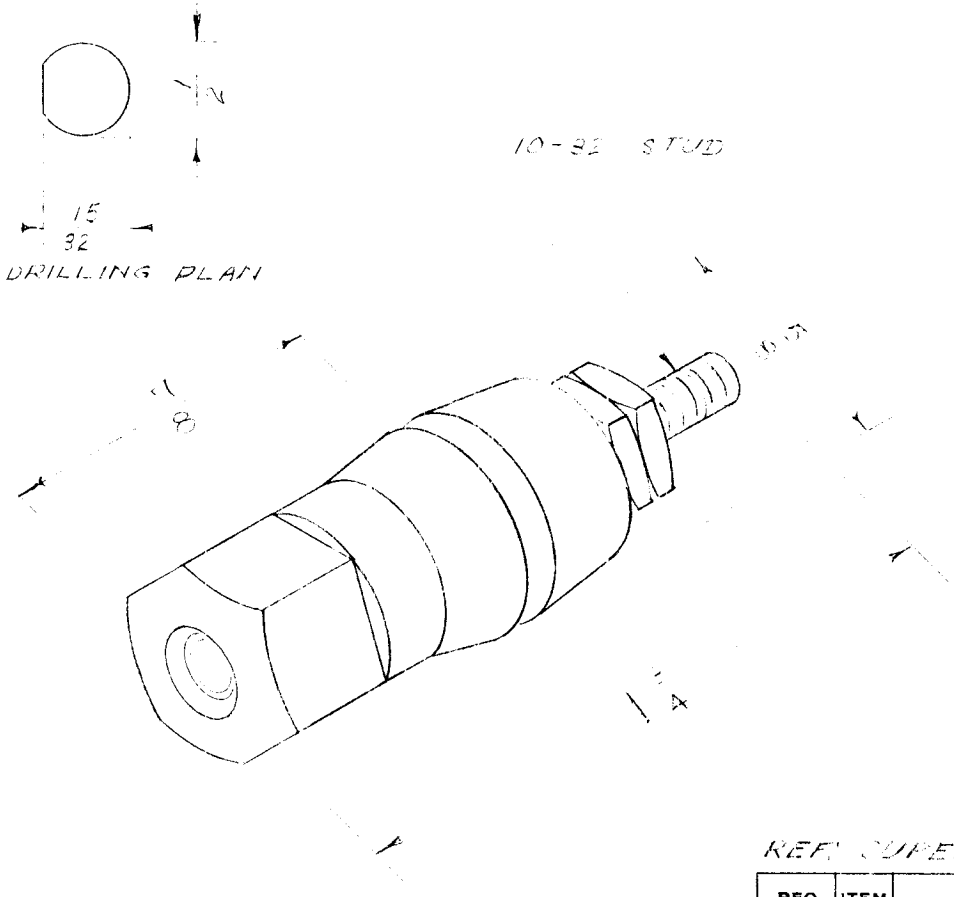

COLOR

B - BLACK
R - RED

TYPE DESIGNATION TO BE IN FOLLOWING FORM

JJ 131 - B

STYLE NO. BLACK

REF. SUPERIOR ELECTRIC CO. BRISTOL CONN. (#DF 30)

DIMENSIONS FOR REF. ONLY.

REQ.	ITEM	PART NO.	DESCRIPTION	SYMBOL

THE TECHNICAL MATERIEL CORP.
MAMARONECK. NEW YORK

BINDING POST

STOCK SIZE

MATERIAL | WEIGHT PER PC.

TYPE & TEMPER

HEAT TREAT. SPEC.

FINISH & SPEC. NO.

DRAWN	ELEC. DES. APP.	MECH. DES. APP.
[illegible]	K2	[illegible]

CHECKED	FINAL APPROVAL
[illegible]	K2

JJ-131

ISSUE	ITEM	CHANGED FROM	DATE	CN. NO.	DRAFTS	CHECKER	ENG. APP.

TOLERANCES		SCALE
ALL OTHERS	DEC. DIM. ± FRAC. DIM. ± ANGULAR DIM. ±	DRILL, PUNCH, COMMERCIAL STOCK SIZES AND MANUFACTURERS TOLERANCES ARE NOT INCLUDED.

FORM —108