IN-1079 Ø

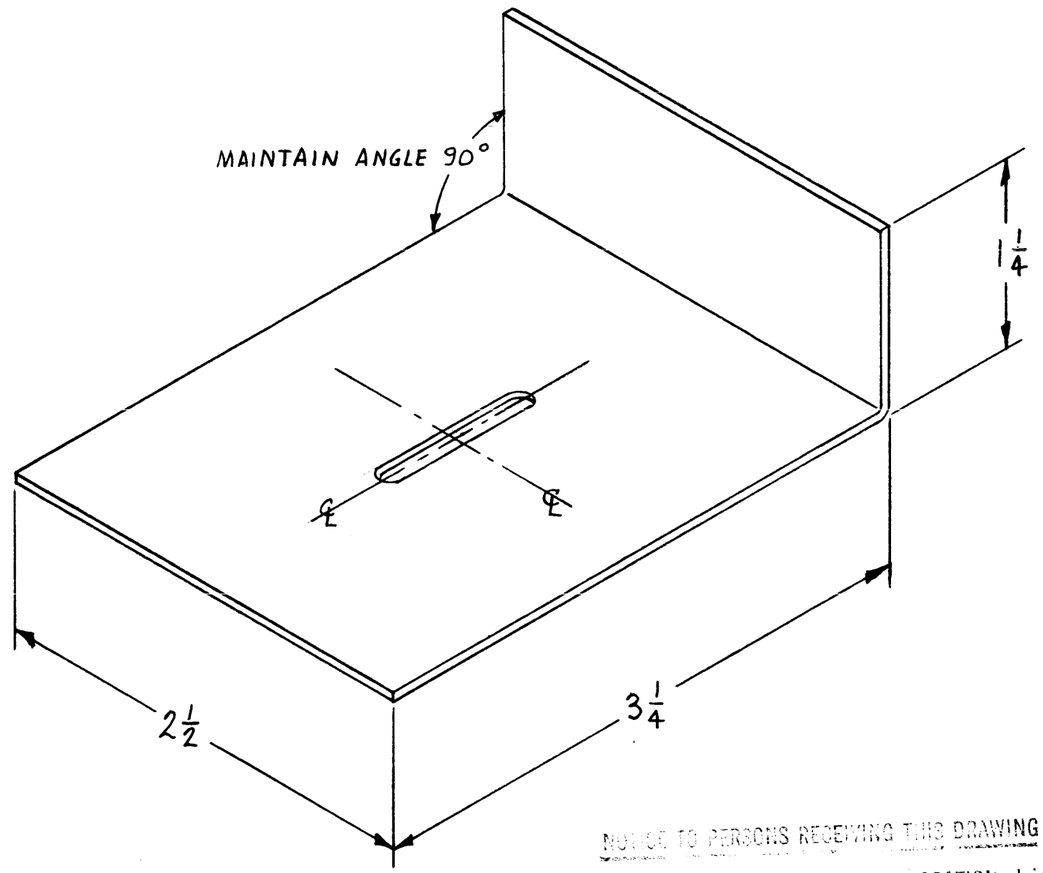

NOTICE TO PERSONS RECEIVING THIS DRAWING

THE TECHNICAL MATERIEL CORPORATION claims proprietary right in the material disclosed hereon. This drawing is loaned in confidence for engineering information only and may not be reproduced or used in manufacture of anything shown hereon without permission from THE TECHNICAL MATERIEL CORPORATION to the user. This drawing is loaned for mutual assistance and is subject to recall at any time.

Property of:

THE TECHNICAL MATERIEL CORPORATION
MAMARONECK, NEW YORK

ISSUE	ITEM	CHANGED FROM	DATE	CH. NO.	DRAFTS	CHECKER	ENG. APP.
Ø		ORIGINAL RELEASE	5/14/60		G		

TOLERANCES

DEC. DIM. ±
FRAC. DIM. ±
ANGULAR DIM. ± .5

SCALE:

MAXIMUM ALLOWABLE TOLERANCES HAVE BEEN DETERMINED AND ANY DEVIATIONS WILL BE CAUSE FOR REJECTION.
REMOVE ALL BURRS AND SHARP EDGES

REQ. PER UNIT	MODEL	PROJECT NO.	ASS'Y. NO.	DATE

USED ON

REQ.	ITEM	PART NO.	DESCRIPTION	SYMBOL
		.081 THICK	THE TECHNICAL MATERIEL CORP. MAMARONECK, NEW YORK	
STOCK SIZE				
ALUMINUM			EQUIPMENT SUPPORT BRACKET FOR CON-1	
MATERIAL				

TYPE & TEMPER	HEAT TREAT. SPEC.	DRAWN	CHECKED	FINAL APPROVAL
		MJT 5-25-59	G	SM 5/14/60
YELLOW IRIDITE - S404				IN-1079 Ø
FINISH & SPEC. NO.		ELEC. DES. APP.	MECH. DES. APP.	

FORM 1 9-A