REQ. PER UNIT	USED ON MODEL	ASS'Y. NO.	DATE	CK1013	A
1	KIT-257		2-21-66		

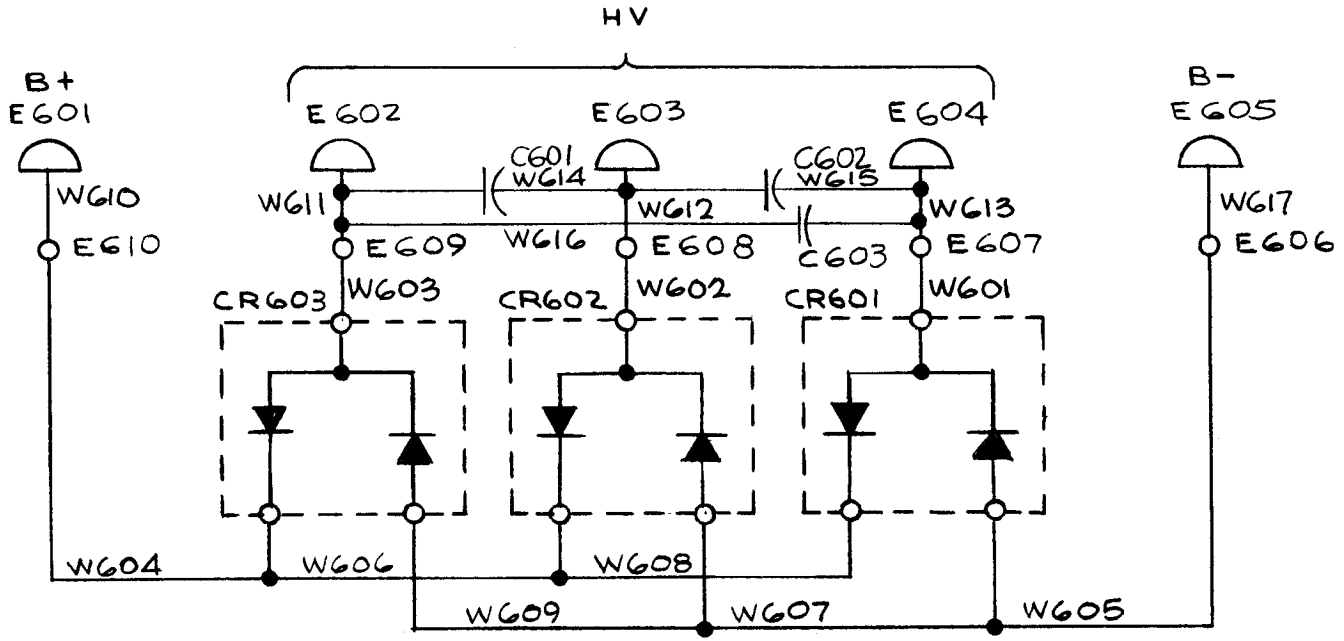

SYM	DESCRIPTION	DATE	CH. NO.	DRAFTS	CHECKER	ENG. APP.
A	DIODE SYMBOL CLARIFIED	9/23/66	16891	JC		
Ø	~~ORIGINAL RELEASE FOR~~ PRODUCTION	2.11.66	—	WHD		
X2	(W) SYMBOLS ADDED	5/12/66	—	JC		
X1	C101, 102, 103 ADDED	4-20-66	X1			

UNLESS OTHERWISE SPECIFIED
DIMENSIONS ARE IN INCHES AND INCLUDE CHEMICALLY APPLIED OR PLATED FINISHES

SCALE

TOLERANCES
DECIMALS .X ± .05, .XX ± .01, .XXX ± .005
FRACTIONS ± 1/64
ANGLES ± 0° 30′

CODE

REQ.	ITEM	PART NO.	DESCRIPTION	SYMBOL

STOCK SIZE

MATERIAL

TYPE & TEMPER | HEAT TREAT. SPEC.

FINISH & SPEC. NO.

BUDETTI

THE TECHNICAL MATERIEL CORP.
MAMARONECK. NEW YORK

DIAGRAM, SCHEMATIC

DRAWN	CHECKED	FINAL APPROVAL
JL	2/21/66	

ELEC. DES. APP.	MECH. DES. APP.	CK1013	A
6-1-66			

ML

TMC FORM 108-A

REPROVEL NO. 440H 23645

REQ. PER UNIT	USED ON			CK1022	Ø
	MODEL	ASS'Y. NO.	DATE		
	RRCA-1		8-6-65		

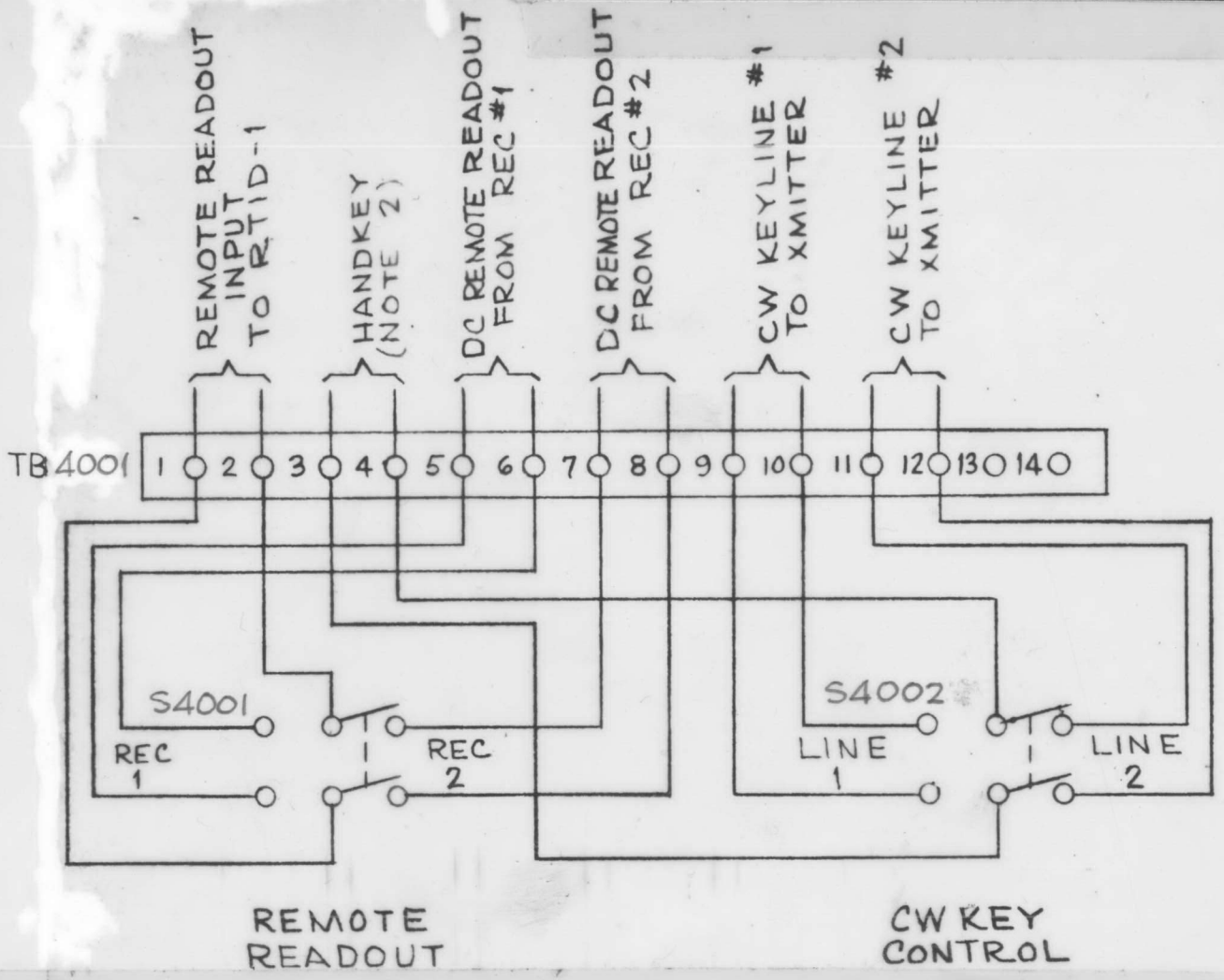

SYM	DESCRIPTION	DATE	CH. NO.	DRAFTS	CHECKER	ENG. APP.
Ø	ORIGINAL RELEASE FOR PRODUCTION	8/6/65	Ø	D.W.		

UNLESS OTHERWISE SPECIFIED
DIMENSIONS ARE IN INCHES AND INCLUDE CHEMICALLY APPLIED OR PLATED FINISHES

TOLERANCES
DECIMALS .X ± .05, .XX ± .01, .XXX ± .005
FRACTIONS ± 1/64
ANGLES ± 0° 30′

SCALE

CODE

REQ.	ITEM	PART NO.	DESCRIPTION	SYMBOL

STOCK SIZE

MATERIAL

TYPE & TEMPER | HEAT TREAT. SPEC.

FINISH & SPEC. NO.

EATON

THE TECHNICAL MATERIEL CORP.
MAMARONECK, NEW YORK

DIAGRAM, SCHEMATIC

DRAWN	CHECKED	FINAL APPROVAL
JC	JCB	RECato 8/6/65
ELEC. DES. APP.	MECH. DES. APP.	CK1022 Ø

TMC FORM 108-A

REPROVEL NO. 440H 23845

REQ. PER UNIT	USED ON MODEL	ASS'Y. NO.	DATE	CK1042	A
	AK101		9-14-65		

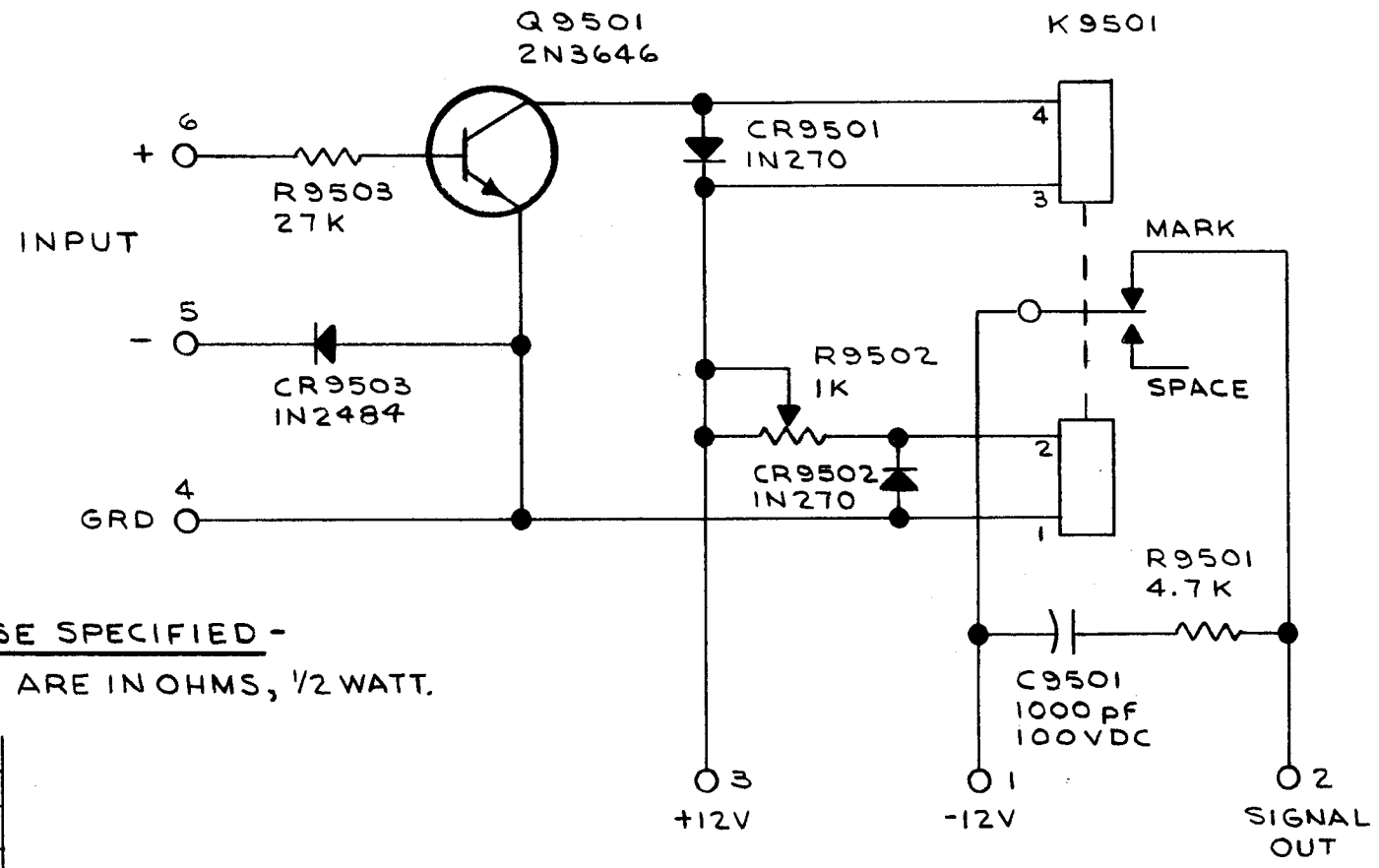

- UNLESS OTHERWISE SPECIFIED -

1- ALL RESISTORS VALUES ARE IN OHMS, 1/2 WATT.

SYMBOLS	
LAST	MISSING
R9503	
C9501	
CR9503	
Q9501	
K9501	

SYM	DESCRIPTION	DATE	CH. NO.	DRAFTS	CHECKER	ENG. APP.
A	IN2484 WAS IN 270	12/7/65	15388	H.V.V.		
Ø	ORIGINAL RELEASE	12/7/65	Ø	H.V.V.		

UNLESS OTHERWISE SPECIFIED
DIMENSIONS ARE IN INCHES AND INCLUDE
CHEMICALLY APPLIED OR PLATED FINISHES

SCALE

TOLERANCES
DECIMALS .X ± .05 .XX ± .01 .XXX ± .005
FRACTIONS ± 1/64
ANGLES ± 0° 30′

CODE

REQ.	ITEM	PART NO.	DESCRIPTION	SYMBOL

STOCK SIZE

MATERIAL

TYPE & TEMPER | HEAT TREAT. SPEC.

FINISH & SPEC. NO.

THE TECHNICAL MATERIEL CORP.
MAMARONECK. NEW YORK

DIAGRAM, SCHEMATIC
(KEYER)

DRAWN	CHECKED	FINAL APPROVAL
J. LESHINSKI 12/2/65	12/2/65	
N. LaBATE		CK1042 A

ELEC. DES. APP. | MECH. DES. APP.

M/L 78

TMC FORM 108-A

REPROVEL NO. 440H 23645

REQ. PER UNIT	USED ON MODEL	ASS'Y. NO.	DATE	CK1050	A
1	TST-10K (AF104)		10-6-65		

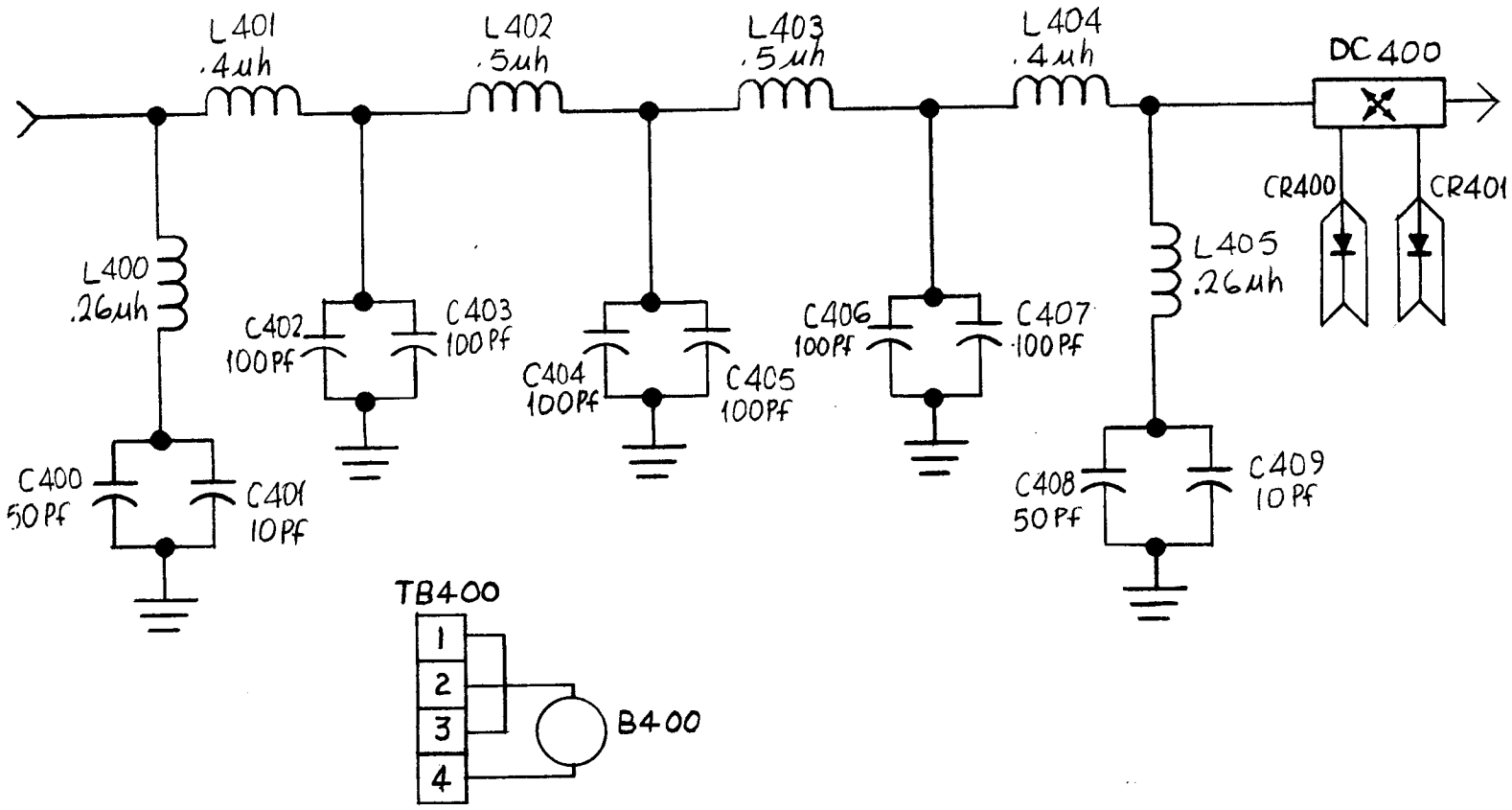

SYM	DESCRIPTION	DATE	CH. NO.	DRAFTS	CHECKER	ENG. APP.
A	ADDED TB400 & B400	6-29-67	18340	L.A.K.		FB
Q	ORIGINAL RELEASE FOR PRODUCTION	8-25-66	Q	RME		
X1	CR400, CR401 ADDED, DC400 CH.	11-23-65	X1			Oa

UNLESS OTHERWISE SPECIFIED
DIMENSIONS ARE IN INCHES AND INCLUDE
CHEMICALLY APPLIED OR PLATED FINISHES

SCALE —

TOLERANCES
DECIMALS .X ±.05 .XX ± .01 .XXX ±.005
FRACTIONS ± 1/64
ANGLES ± 0° 30′

CODE

REQ.	ITEM	PART NO.	DESCRIPTION	SYMBOL

STOCK SIZE —

MATERIAL —

TYPE & TEMPER — HEAT TREAT. SPEC. —

FINISH & SPEC. NO. —

F. BUDETTI

THE TECHNICAL MATERIEL CORP.
MAMARONECK. NEW YORK

DIAGRAM, SCHEMATIC
LOW PASS FILTER, FIXED

DRAWN — CHECKED — FINAL APPROVAL

ELEC. DES. APP. — MECH. DES. APP.

CK1050 A

ML X6

TMC FORM 108-A

REPROVEL NO. 440H 23645

REQ. PER UNIT	USED ON MODEL	ASS'Y. NO.	DATE	CK1053	Ø
	DVC-1				

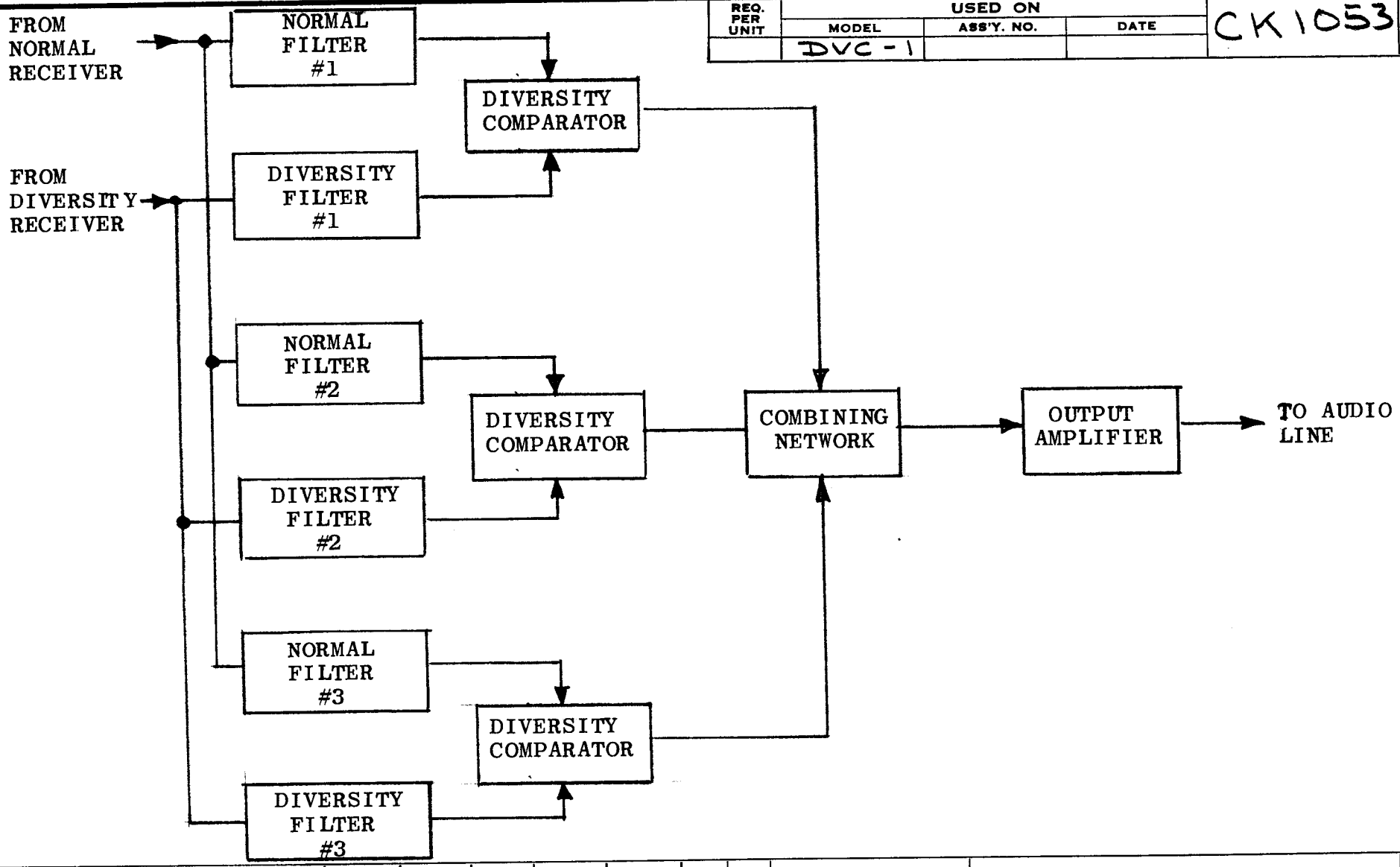

SYM	DESCRIPTION	DATE	CH. NO.	DRAFTS	CHECKER	ENG. APP.
Ø	ORIG RELEASE	10/18/65	Ø			

UNLESS OTHERWISE SPECIFIED DIMENSIONS ARE IN INCHES AND INCLUDE CHEMICALLY APPLIED OR PLATED FINISHES

TOLERANCES: DECIMALS .X ±.05, .XX ±.01, .XXX ±.005; FRACTIONS ± 1/64; ANGLES ± 0° 30′

SCALE

CODE

REQ.	ITEM	PART NO.	DESCRIPTION	SYMBOL

STOCK SIZE

MATERIAL

TYPE & TEMPER | HEAT TREAT. SPEC.

FINISH & SPEC. NO.

THE TECHNICAL MATERIEL CORP.
MAMARONECK, NEW YORK

DIAGRAM, BLOCK

DRAWN: GDK | CHECKED: 10/18/65 | FINAL APPROVAL

ELEC. DES. APP. | MECH. DES. APP.

CK1053 Ø

TMC FORM 108-A

REPROVEL NO. 440H 21540

USED ON			
MODEL	ASSY. NO.	DATE	CK1055 B
MIV-270	AK619	10-29-65	

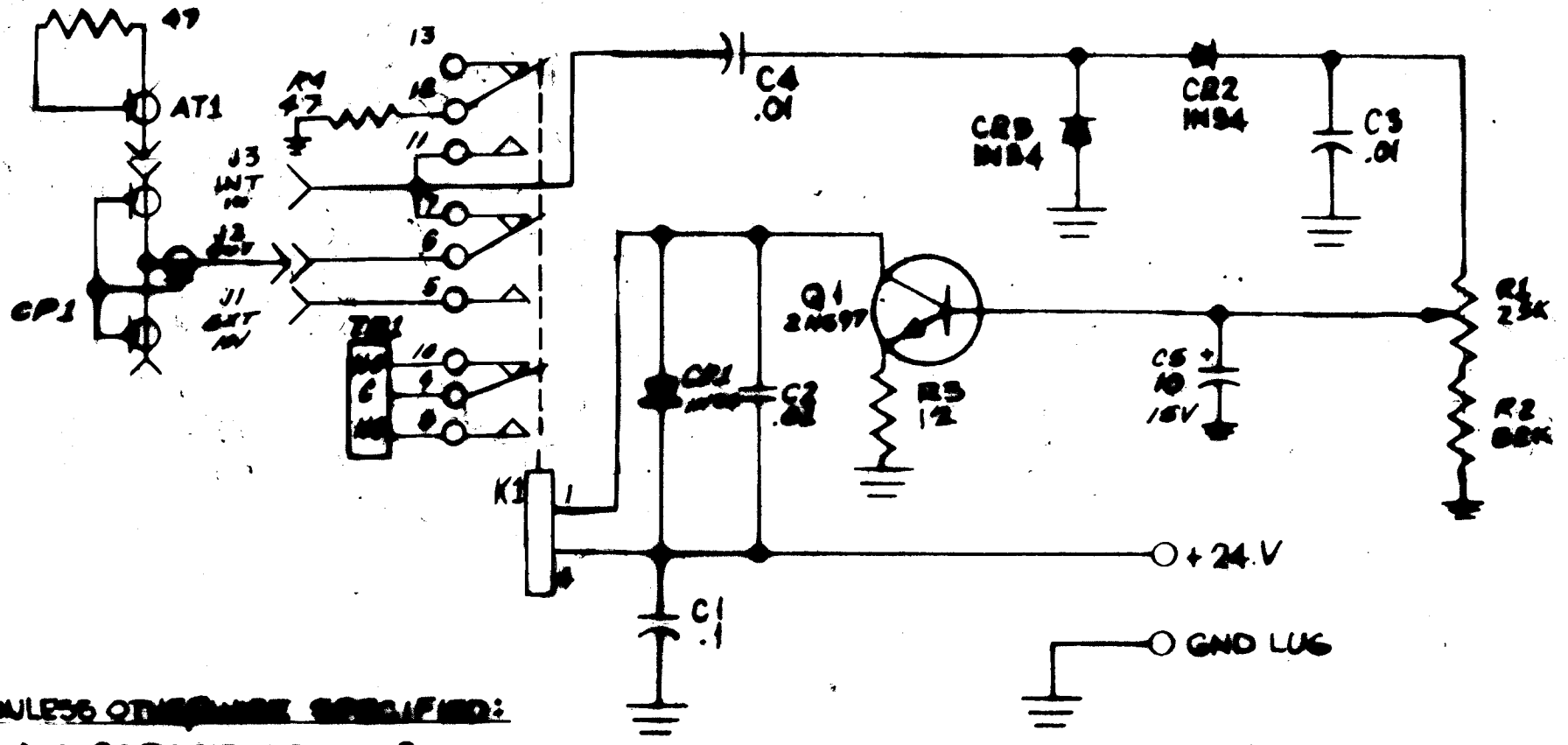

UNLESS OTHERWISE SPECIFIED:

1. ALL CAPACITORS IN µf
2. RELAY K1 SHOWN ENERGIZED.

SYM	DESCRIPTION	DATE	CHK.				
D	Rev. Chan. Pot. 11 & 7 on K1	4-20-66	16442				
A	[illegible]	2-2-65	16453				
Ø	ORIGINAL RELEASE	11-8-65					

UNLESS OTHERWISE SPECIFIED
RESISTORS ARE 1/2 WATTS AND INSULATOR
MATERIALS APPLIED TO PLATED PARTS

TOLERANCES ±1/64

SCALE

SYM.	ITEM	PART NO.	DESCRIPTION	SYMBOL

F. BUDETTI

THE TECHNICAL MATERIEL CORP.
MAMARONECK, NEW YORK

SCHEMATIC DIAGRAM
1. MC AUTOMATIC SWITCHOVER

G.D.L. 10-29-65

CK1055 B

REQ. PER UNIT	USED ON MODEL	ASS'Y. NO.	DATE
1	TTC-1		
1	TPCA-1		
1	KIT-252		
1	KIT-278		

CK1079 B

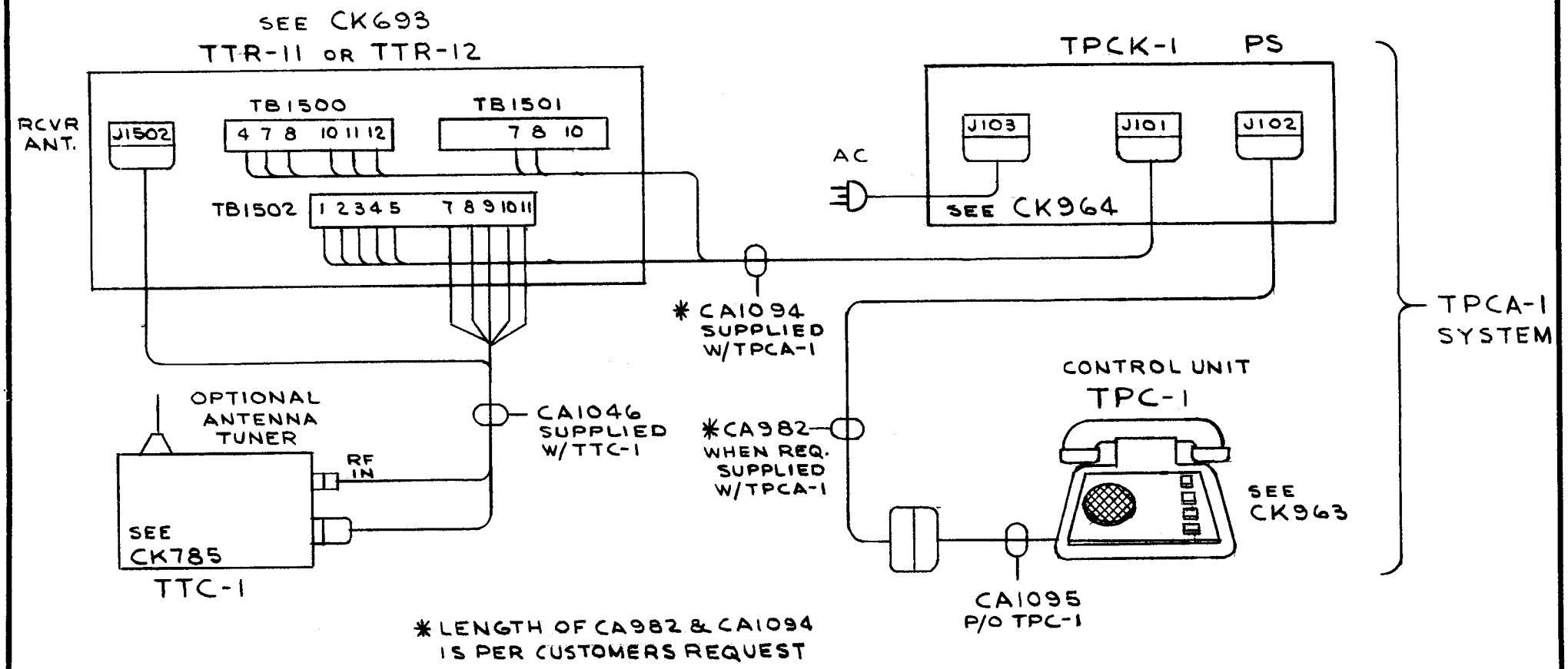

SYM	DESCRIPTION	DATE	CH. NO.	DRAFTS	CHECKER	ENG. APP.
B	PICTORIAL TPC-1 CLARIFIED CONN. FROM J101, TO TER. 11 TB1502 DEL.	2-9-66	15718			
A	REVISED CONNECTIONS FR. J101 & J102; ADD * NOTE & REF.	1/20/66	15621	JL		
Ø	ORIG RELEASE FOR PROD	12/29/65	Ø			

REQ.	ITEM	PART NO.	DESCRIPTION	SYMBOL
			POSE	

STOCK SIZE

MATERIAL

TYPE & TEMPER | HEAT TREAT. SPEC.

FINISH & SPEC. NO.

THE TECHNICAL MATERIEL CORP.
MAMARONECK, NEW YORK

DIAGRAM, INTERCONNECT

DRAWN	CHECKED	FINAL APPROVAL
J.L.	12/29/65	
ELEC. DES. APP. 12/29	MECH. DES. APP.	CK1079 B

UNLESS OTHERWISE SPECIFIED DIMENSIONS ARE IN INCHES AND INCLUDE CHEMICALLY APPLIED OR PLATED FINISHES

SCALE

CODE

TOLERANCES: DECIMALS .X ±.05, .XX ±.01, .XXX ±.005; FRACTIONS ± 1/64; ANGLES ± 0° 30′

ML

TMC FORM 108-A

REPROVEL NO. 440H 23645

UNLESS OTHERWISE SPECIFIED -
ALL RESISTOR VALUES ARE IN OHMS 1/2W.

REQ. PER UNIT	USED ON MODEL	ASS'Y. NO.	DATE	CK1085	Ø
	HFD-1S		1-14-66		

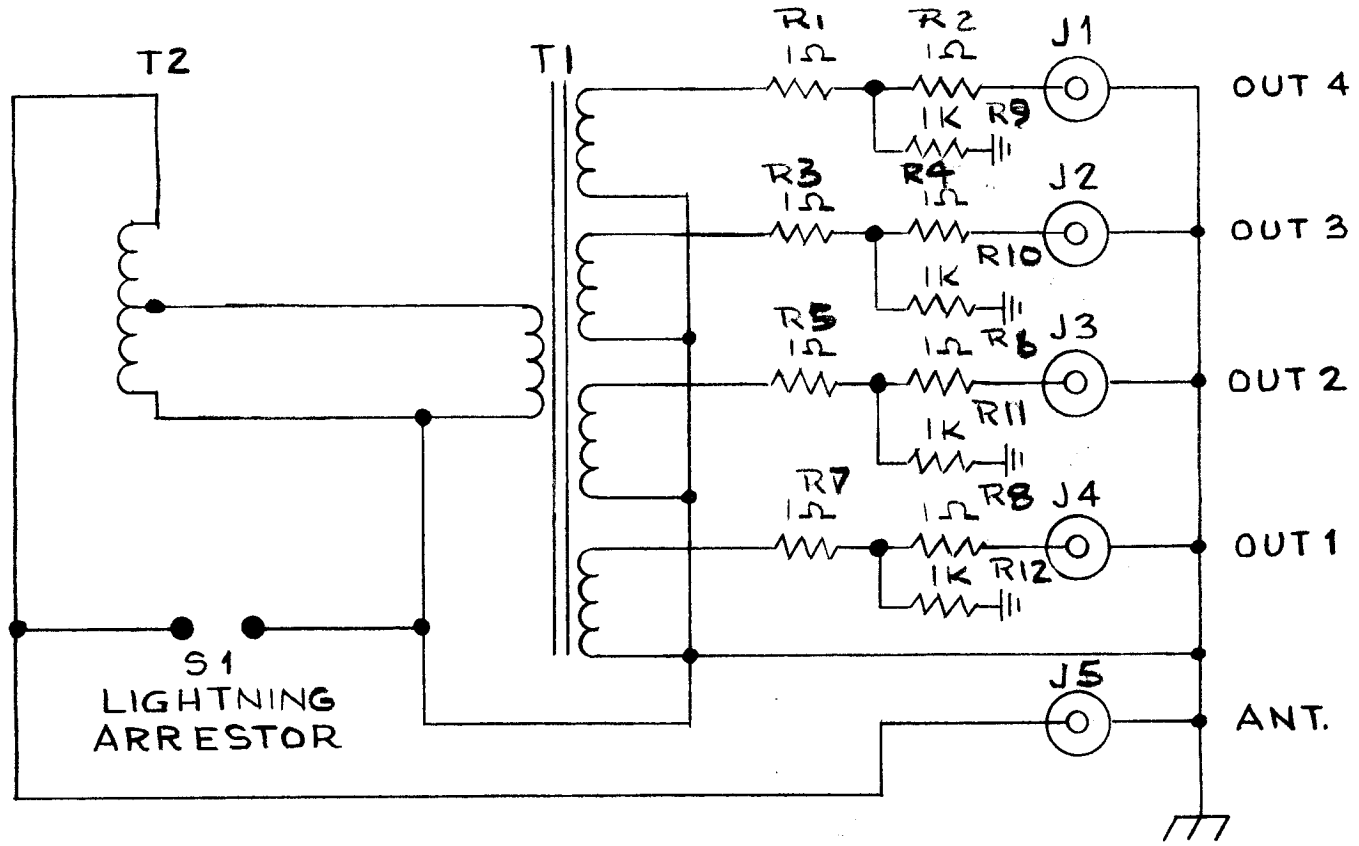

LAST SYM. USED
J5
R12
S1
T2

SYM	DESCRIPTION	DATE	CH. NO.	DRAFTS	CHECKER	ENG. APP.
Ø	ORIGINAL RELEASE	1/17/66	Ø			

UNLESS OTHERWISE SPECIFIED
DIMENSIONS ARE IN INCHES AND INCLUDE
CHEMICALLY APPLIED OR PLATED FINISHES

SCALE

TOLERANCES
DECIMALS .X ±.05 .XX ± .01 .XXX ±.005
FRACTIONS ± 1/64
ANGLES ± 0° 30′

CODE

REQ.	ITEM	PART NO.	DESCRIPTION	SYMBOL

STOCK SIZE

MATERIAL

TYPE & TEMPER | HEAT TREAT. SPEC.

FINISH & SPEC. NO.

THE TECHNICAL MATERIEL CORP.
MAMARONECK, NEW YORK

DIAGRAM, SCHEMATIC
MODEL HFD-1S

DRAWN	CHECKED	FINAL APPROVAL
M.T.		
ELEC. DES. APP.	MECH. DES. APP.	CK1085 Ø
1-17-66		

M 1/25/67

TMC FORM 108-A

REPROVEL NO. 440H 23845

REQ. PER UNIT	USED ON MODEL	ASS'Y. NO.	DATE
1	LSP-8		1/5/66
1	LSP-8A		4/12/66

CK1087 A

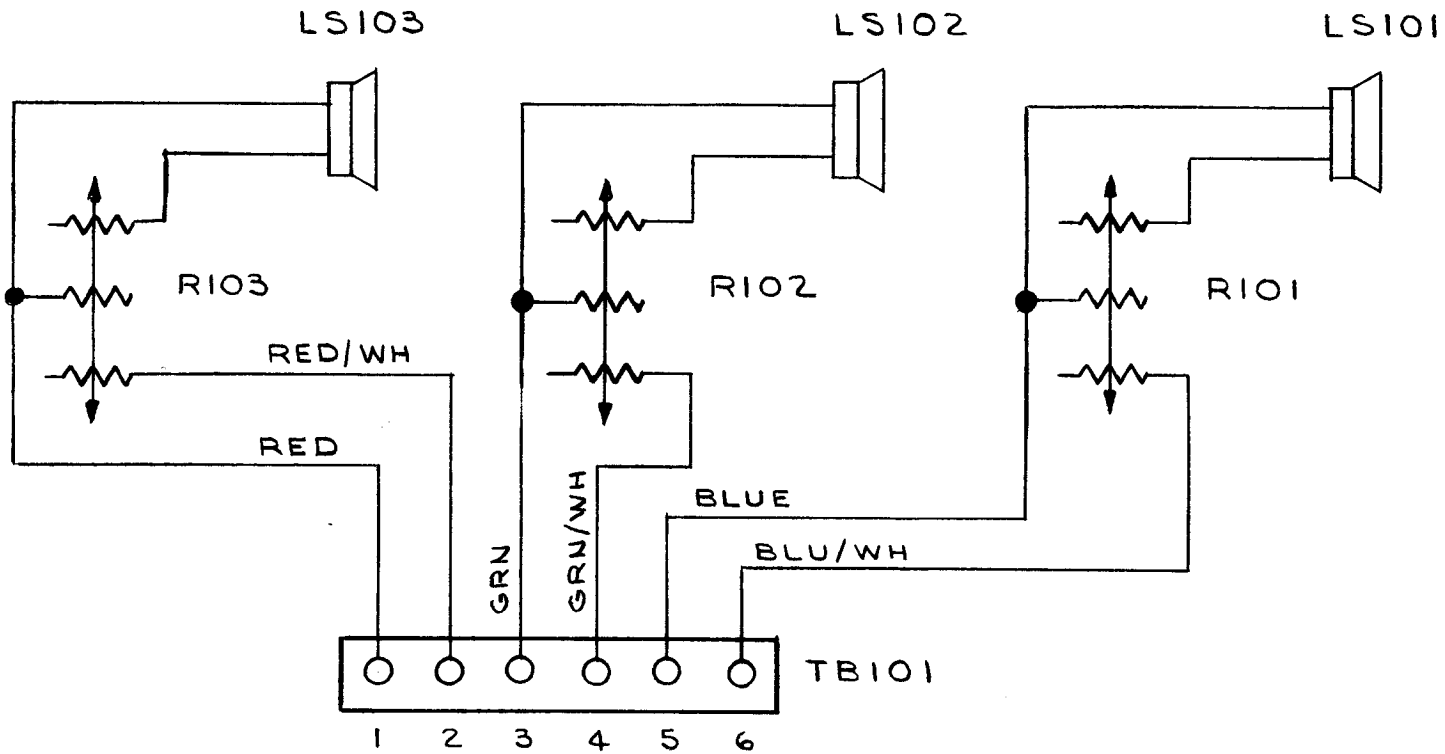

SYM	DESCRIPTION	DATE	CH. NO.	DRAFTS	CHECKER	ENG. APP.
A	Add LSP-8A (Model)	5/4/66	C.C	C.V		
Ø	ORIGINAL RELEASE	1/6/66	Ø			

UNLESS OTHERWISE SPECIFIED
DIMENSIONS ARE IN INCHES AND INCLUDE
CHEMICALLY APPLIED OR PLATED FINISHES

SCALE

TOLERANCES
DECIMALS .X ± .05 .XX ± .01 .XXX ± .005
FRACTIONS ± 1/64
ANGLES ± 0° 30′

CODE

REQ.	ITEM	PART NO.	DESCRIPTION	SYMBOL

STOCK SIZE

MATERIAL

TYPE & TEMPER | HEAT TREAT. SPEC.

FINISH & SPEC. NO.

R. HAY

THE TECHNICAL MATERIEL CORP.
MAMARONECK. NEW YORK

DIAGRAM, SCHEMATIC

LSP-8

DRAWN	CHECKED	FINAL APPROVAL
JL	1/5/66	

ELEC. DES. APP. | MECH. DES. APP.

CK1087 A

TMC FORM 108-A

REPROVEL NO. 440H 23645

REQ. PER UNIT	USED ON			CK1096	Ø
	MODEL	ASS'Y. NO.	DATE		
	FSA-4		2-16-66		

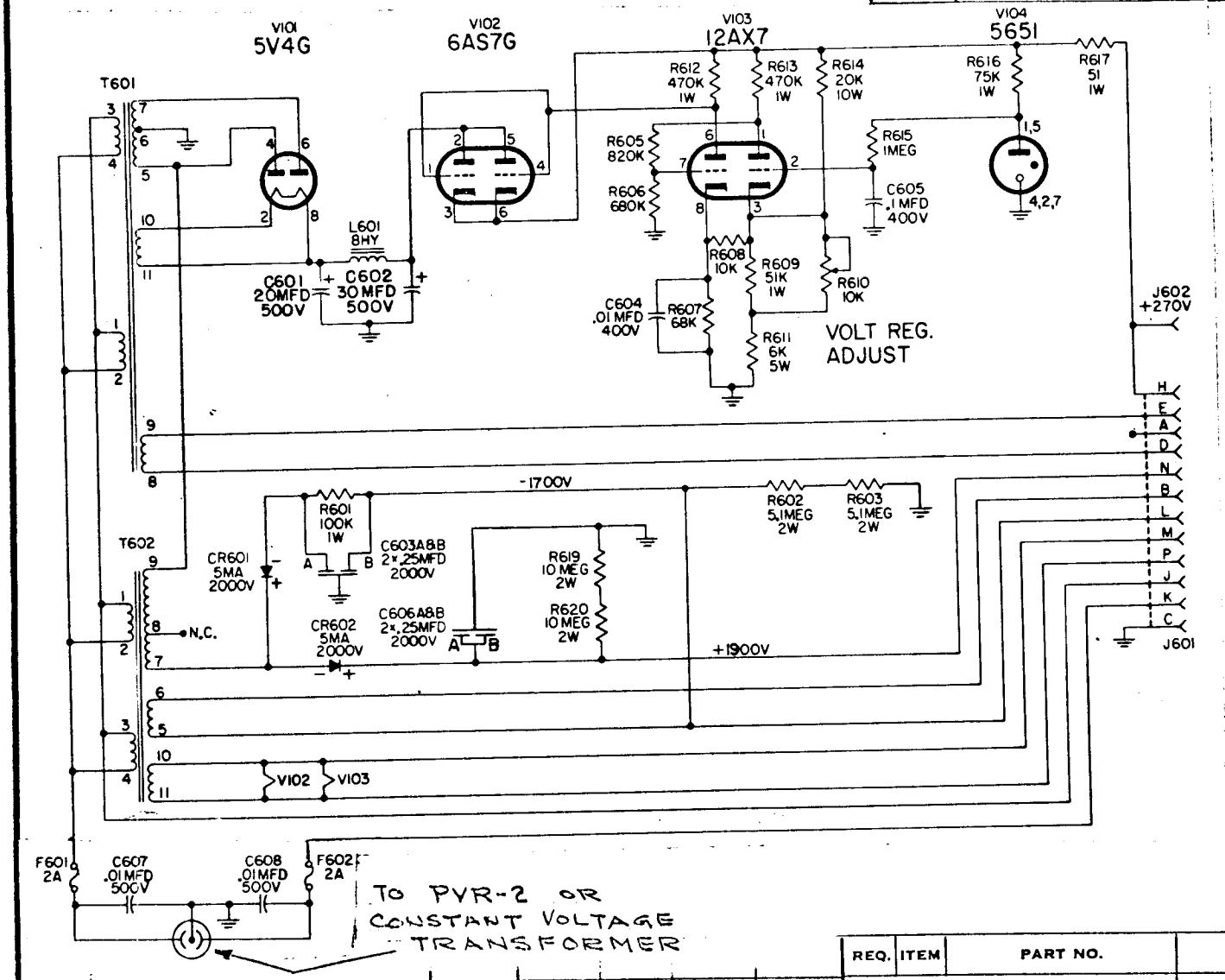

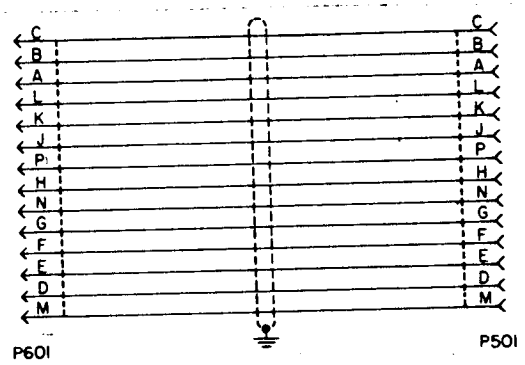

NOTE: ALL RESISTORS ARE 1/2 WATT
UNLESS OTHERWISE SPECIFIED

SYM	DESCRIPTION	DATE	CH. NO.	DRAFTS	CHECKER	ENG. APP.
Ø	ORIGINAL RELEASE FOR PRODUCTION	2-16-66	~~M~~	JC		

UNLESS OTHERWISE SPECIFIED
DIMENSIONS ARE IN INCHES AND INCLUDE
CHEMICALLY APPLIED OR PLATED FINISHES

TOLERANCES
DECIMALS .X ± .05, .XX ± .01, .XXX ± .005
FRACTIONS ± 1/64
ANGLES ± 0° 30'

SCALE
CODE

REQ.	ITEM	PART NO.	DESCRIPTION	SYMBOL

STOCK SIZE
MATERIAL
TYPE & TEMPER | HEAT TREAT. SPEC.
FINISH & SPEC. NO.

THE TECHNICAL MATERIEL CORP.
MAMARONECK, NEW YORK

DIAGRAM, SCHEMATIC
FSA-4 (POWER SUPPLY)

DRAWN | CHECKED | FINAL APPROVAL
ELEC. DES. APP. | MECH. DES. APP.

CK1096 Ø